HOLLAND BILL OF MATERIAL

MARK	P/N	QTY	MATL	NAME DESCRIPTION	
A	------	2	--------	FLAT CAR (60'-0" LG. DECK / 60 TON)	--
B	------	1	--------	'HIAB' MODEL 090 KNUCKLE CRANE	--
C	------	1	--------	OXYGEN/ACETYLENE BOTTLE RACK	--
D	------	2	--------	TELESCOPING/TILTING THREADER BOX	--
E	------	2	--------	STATIONARY THREADER BOX	--
F	------	1	--------	HAND RAILINGS, ETC.-THREADER CAR	--
G	------	1	--------	FLAT CAR (70'-0" LG. DECK / 100 TON)	--
H	------	2	--------	FOLD-DOWN SIDE WALK ASSEMBLY	--
J	------	2	--------	VERT. & HOR. ADJUSTABLE THREADER BOX ASS'Y.	--
K	------	1	--------	SUPPORT STRUCTURE, STAIRWAYS, RAILINGS, ETC.	--
L	------	2	--------	THREADER BOX ASSEMBLY	--
M	------	2	--------	THREADER BOX ASSEMBLY	--
N	------	2	--------	CUMMINS DIESEL ENGINE AND HYD. PUMP UNIT	--
P	------	1	--------	HYDRAULIC TANK (400 GAL. CAP'Y.)	--
R	------	2	--------	PUSHER (4-WHEEL DRIVE & LIFT ROLLERS)	--
S	------	2	--------	FUEL TANK (400 GAL. CAP'Y.)	--
T	------	1	--------	OPERATORS STATION	--
U	------	2	--------	WINCH ASS'Y. (R. HAND-30,000# PULL, 35 FPM)	--
W	------	2	--------	WINCH ASS'Y. (L. HAND-30,000# PULL, 35 FPM)	--
X	------	3	--------	CROSSOVER BRIDGE	--
Y	------	2	--------	THREADER BOX ASSEMBLY - ADJUSTABLE	--
Z	------	1	--------	HAND RAILINGS, ETC.-RAMP CAR	--

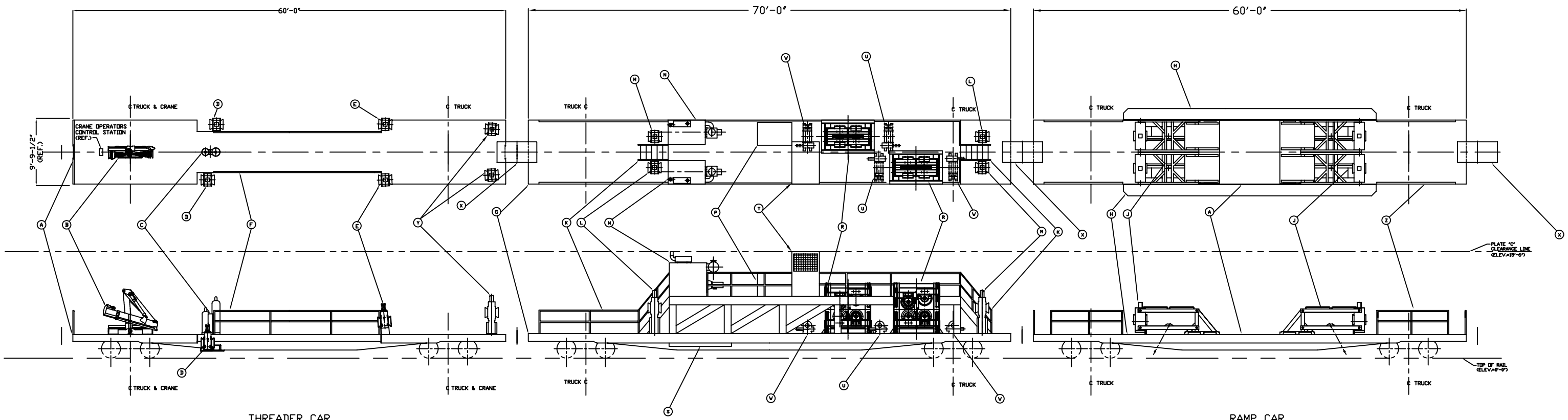

PRELIMINARY
NOT FOR CONSTRUCTION

CERTIFIED PRINT
APPROVED BY: _____
DATE: _____
I CERTIFY THAT PART(S) FURNISHED COMPLY WITH THE PRINT.
VENDOR NAME: _____
INSPECTOR: _____
DATE: _____ LOT SIZE: _____
LOT # OR P.O.: _____
NOTE: A SIGNED COPY OF PRINT MUST ACCOMPANY SHIPMENT.

USED ON: .
SEE BM: .
QUANTITY REQUIRED: .

THIS DRAWING IS PROPERTY OF HOLLAND COMPANY WHO CLAIMS PROPRIETARY RIGHTS IN THE MATERIAL DISCLOSED. IT IS ISSUED IN CONFIDENCE FOR ENGINEERING INFORMATION ONLY AND MAY NOT BE COPIED OR USED FOR MANUFACTURE OF ANYTHING SHOWN WITHOUT SPECIFIC WRITTEN PERMISSION FROM HOLLAND COMPANY. HOLLAND COMPANY RESERVES THE RIGHT TO MODIFY DETAILS NOT AFFECTING STRENGTH OR APPLICATION AS MAY BE NECESSARY TO FACILITATE MANUFACTURE OR IMPROVE DESIGN.

TOLERANCES
UNLESS OTHERWISE NOTED
FRACTIONS ± 1/64
TWO PLACES DEC. ± .01
THREE PLACES DEC. ± .005
ANGLES ± 1°
FINISH 125 MICRO

PROPERTY OF
Holland
Company

REV. LEVEL	DATE	CHG. NOTICE & DESCRIPT.	BY
.	.	.	.

DR. LONG ISLAND RAILROAD
DES. GENERAL ARR'T.,SINGLE-DIRECTION
CH. PICK-UP/LAYDOWN UNIT
AP.
SCALE NONE | DATE 04/24/00 | DWG. NO. SD-FC0612